IXBB-500E

2.8-12mm 4X 6MP VCA AI Face Detection Human & Vehicle Detection Dual Light PoE Bullet IP Camera



Features

- 1/2.8" CMOS Sensor
- 6MP HD Resolution Output
- Face Detection,Human&Vehicle Detection, Line Crossing, Area Entry/Leaving Detection, Area Intrusion Detection
- Low illumination 0.01Lux
- Day/ Night (ICR), AWR, 2D/3D-DNR, IR-CUT
- WDR, Motion Detection, Privacy Mask, Flip
- RTSP and Onvif 23.12 Compatible
- H.265/ H.264 Dual-stream Media Server
- Easy-to-use P2P Cloud Service
- Multi web browser, PC Client, Mobile APP, Remote access
- RJ45 100mbps Network Port, IEEE802.3af PoE
- Lightning Protection 4000V
- Strong Water-proof Housing, IP66
- 4pcs Array IR & Warm Light LEDs, Light Distance 30-40M
- Warm Light on and Colorful Imaging When Detect Human Body or Vehicle
- 2.7-13.5 Motorized Lens
- Internal Microphone Optional

Dimension

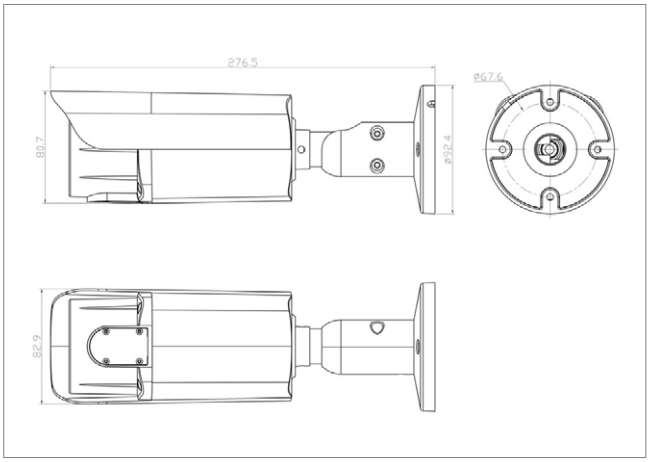

Specification

Model	IXBB-500E
Camera	
Image Sensor	1/2.8" Sony IMX335 CMOS
Soc Chip	Sigmastar SSC377D
Effective Pixels	3072(H)×2048 (V)
Exposure Shutter	AUTO/Manual: 1/10s ~ 1/8000s, Max. Shutter speed adjustable
Day/Night	Auto(Active/passive/schedule)/Day/Night, switch threshold, sensitivity
Image Adjust	Brightness,Saturation, Sharpness, Contrast, Denoise (0-100%) adjustable
Image Adjust	Brightness,Saturation, Sharpness, Contrast, Denoise (0-100%) adjustable
White Balance	AWB/MWB
WDR	100db WDR
DNR	2D/3D DNR
Encode	
Video Standard	H.264/H.265/MJPEG
Video Resolution	Main Stream: 25fps@6MP(3072x2048), 30fps@5MP(2592x1944)/ 4MP(2560x1440)/ 3MP(2304x1296)/1080P/720P Sub stream: 10fps@720P, 30fps@D1 (704x576) /(720x480) / VGA(640x480) /QVGA(640x360)
Video Bitrates	Sub stream: 64kbps-8Mbps Sub stream: 64kbps-2048kbps VBR/CBR , quality(1-9), GOP(1-128)
Image Rotation	0 / 90 / 180 / 270 degree adjustable
Border Crop	X crop, Y crop
Image Mirror	horizon / vertical / horizon&vertical adjustable
OSD Overlay	Font size(1-4), position,Time, Title, AM/PM, Color, User OSD, Alarm OSD
Privacy Mask	4 areas
Region of Interest	ROI: Each stream support 8 areas
Audio Standard	G.711-u/G.711-a/AAC/PCM, AEC
Built-in Mic	Optional
Led	
Light	4pcs Array IR & Warm Light LEDs
Light Distance	30-40M
Lens	
Focal length	2.7-13.5mm Motorized Lens
Language	
	English, simplified Chinese, Chinese Traditional, Korean, etc.
Smart Detection	
Motion Detection	Yes
Digital IO Alarm	1 pair Alarm-in/Alarm-out, normally open/ normally close
Human Vehicle Detection	support
Cross Line Detection	support
Perimeter protection	support
Face Detection	support
Target Detection Type	Human Shape, vehicle, non-motor vehicle, Pet, Face (32px-800px)
Trigger Action Linkage	Snapshot, Record, Relay, Email, FTP, NAS storage (optional)
Simultaneous Detection	Maximum 16 targets simultaneous detection
Storage Type	Schedule/Trigger:Email, FTP, NAS
Network Services	
Protocol	HTTP(s)/RTSP/FTP/SMTP/DHCP/NTP/DST/ RTP/RTMP/P2P/HiK/IPv4/IPv6/NFS
P2P Mobile APP	Android, IOS
Web Access	IE, Firefox, Chrome, Edge, Safari, etc.
PC Tool	Windows, Mac
ONVIF	23.12 compatible (profile S G T M)
General	
Network Port	1-RJ45, 100Mbps, POE optional
Power Supply	12 VDC ± 10%
Power Consumption	< 8 W
Operating Temp.	-20℃-(+60)℃, 10%-90%RH